Tact Switches

Specifications:

Contact rating:	42 V DC, 100 mA
Contact resistance:	< 100 mΩ
Insulation resistance:	> 100 MΩ
Dielectric strength:	150 V, 50 Hz for the duration of 1 minute
Operating temperature:	– 40 °C to + 90 °C
Operating force:	3.6 N ± 0.7 N
Mechanical life:	> 5 000 000 operations
Material:	Contacts: stainless steel, gold-plated — Terminals: brass, tin-plated Cover: PA 46, grey — Base: PPS, grey Stem: natural rubber
Protection:	Contact system sealed by rubber actuator
Mounting:	on pc-board, TSSE 21495 S: SMD
Soldering conditions:	wave soldering, max. 5 s, max. 260 °C, pre-heat max. 120 s, max. 140 °C TSSE 21495 S: Jedec STD-020 D (peak 10 s, 260 °C)

5

Models: Switching functions

TSE 21495 S off – mom

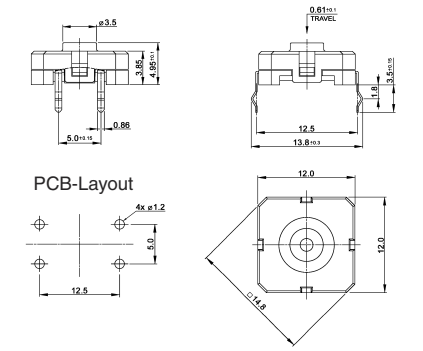

TSE 21495 S-1 off – mom

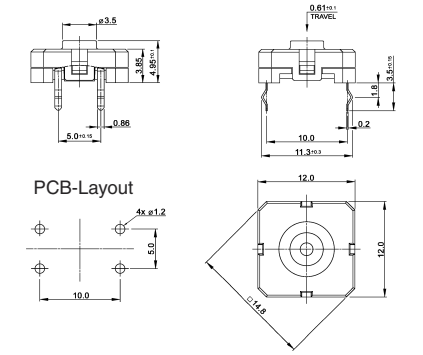

TSSE 21495 S-T off – mom

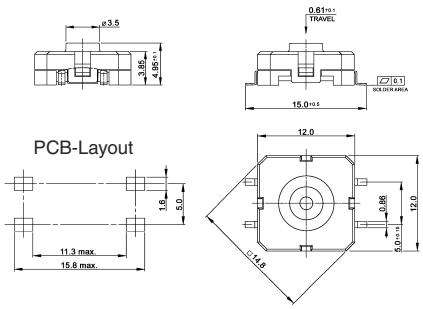

Packing:

TSE 21495 S, TSE 21495 S-1	30 pieces in stick
TSSE 21495 S-T	600 pieces/reel
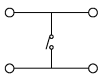
Circuit diagram: