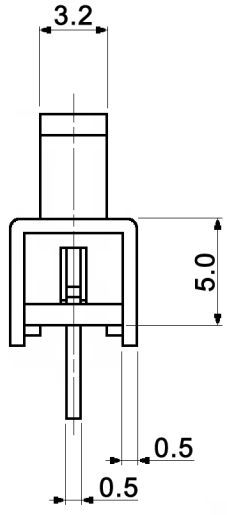


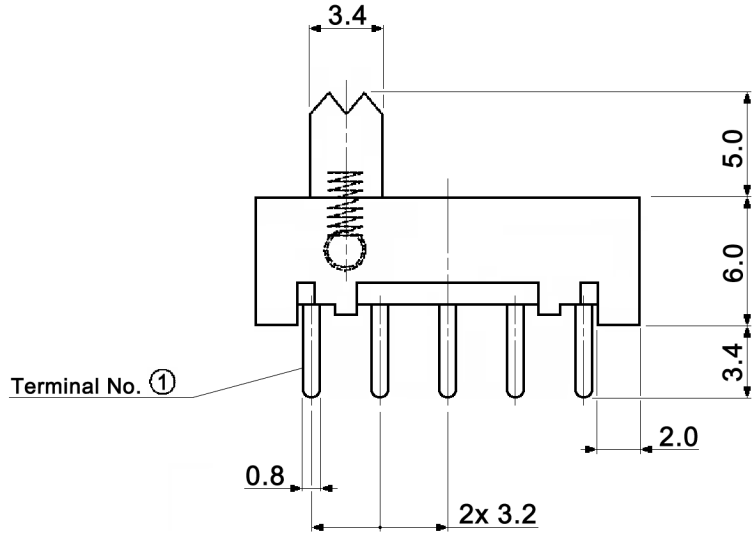


CIRCUIT DIAGRAM
BOTTOM VIEW

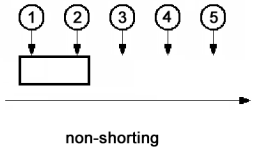


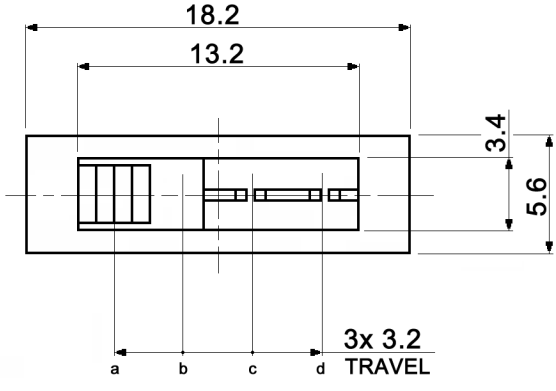


HOLE LAYOUT ⊕ 0.05

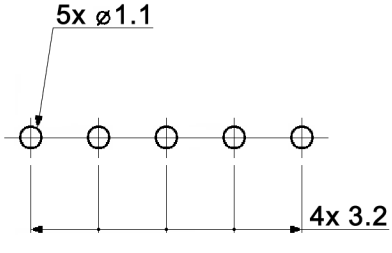


Specifications:

| | |
|---|---|
| Contact rating: | 350 mA, 30 V DC |
| Contact resistance: | 20 mOhm max. |
| Insulation resistance: | 100 MOhm min. at 500 V DC |
| Dielectric strength: | 500 V AC, 50 Hz for 1 minute |
| Operating temperature: | -40°C to +85°C |
| Storage temperature: | -40°C to +85°C |
| Mechanical life: | 10 000 cycles |
| Operating force: | 250 +/-100 gf |
| Soldering conditions: | auto-soldering, pre-heat: max. 100°C, max. 100 sec.; wave soldering: max. 260°C, 5 sec. |
| Material: | Terminal: brass, silver plated<br>Base: phenolic resin<br>Frame: steel, nickel plated<br>Contact: brass, silver plated<br>Spring: SWC, tempered<br>Slider: PA66, UL94-HB, black |

Compliance: RohS III (2015/863/EU)

| | | | | | |
|---|---|---|---|---|---|
| Tolerances: up to 10: ±0.2mm<br>above 10-50: ±0.3mm | | | Date | Name | MFP 140 |
| | | | 01/10 | dr | |
| | | | | | |
| | | | | | |
| | | | | | |
| | | | knitter-switch | 30 19 88 | Page |
| Specifications | 01/21 | dr | | | 1/1 |
| Modifications | Date | Name | | | |