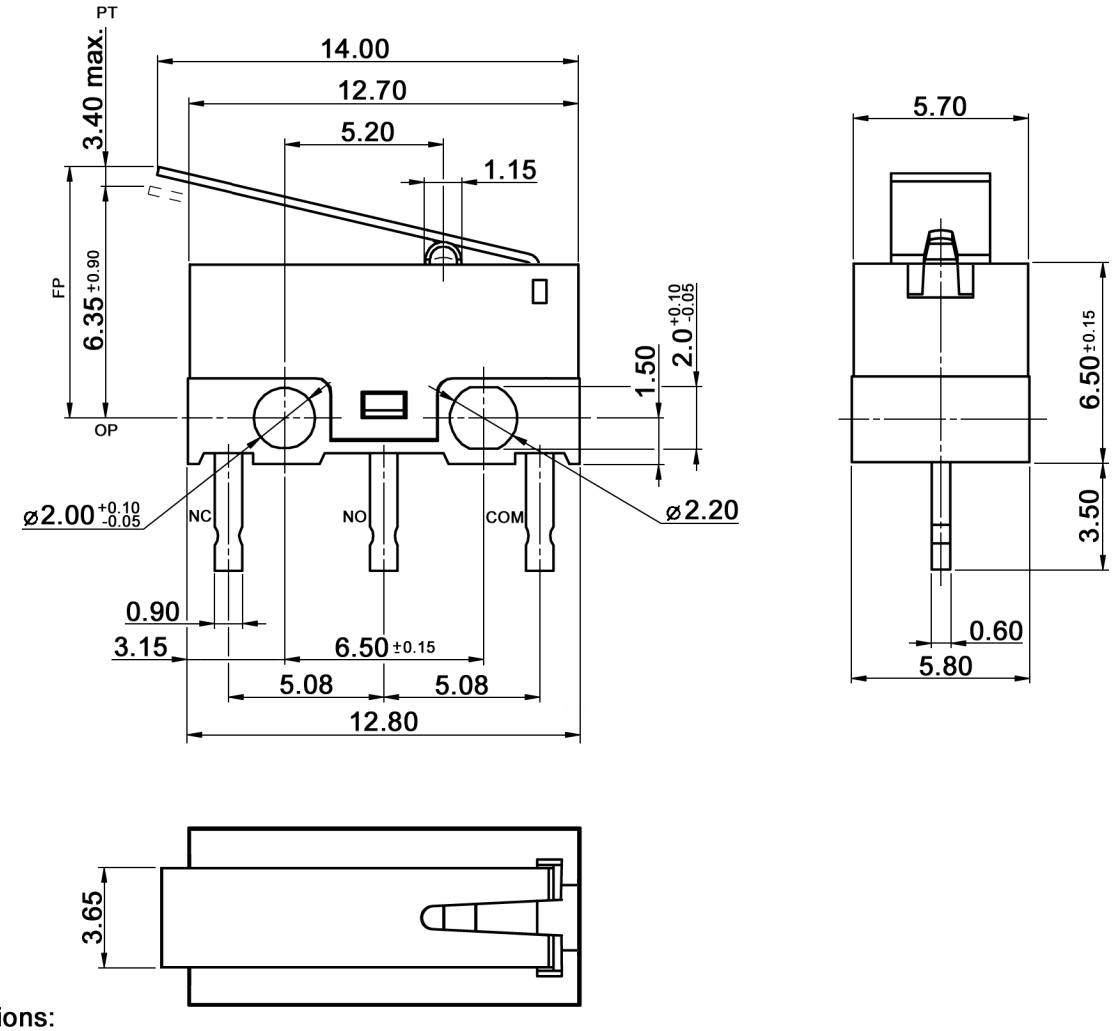

Specifications:

Contact rating:	1 A/3 A, 125 V AC 1 A/3 A, 125 V AC µ40T85
Contact resistance:	100 mOhm max.
Insulation resistance:	100 MOhm min. at 500 V DC for 1 minute +/-5 sec.
Dielectric strength:	1000 V (50/60 HZ, 10 mA) for 1 minute +/-5 sec.
Operating temperature:	-40°C to +85°C
Mechanical life:	1 000 000 cycles
Electrical life:	10 000 cycles
Operating force:	50 gf max.
Release force:	8 gf min.
Differential travel:	0.80 mm max.
Over travel:	0.30 mm min.
Soldering conditions:	260°C max., 3 sec. max.
Material:	Cover / case: PBT, UL94V-0 Plunger: PA, UL94V-HB Terminals: Cu alloy, Ag plated Moving plate parts: Cu alloy Contact: AgCu alloy Terminals contact: Cu alloy

Compliance: RohS III (2015/863/EU)

Tolerances: ±0.40 mm			Date	Name	DM-DMG 3 L02P150
			03/20	dr	
			knitter-switch	30 43 74	Page 1/1
Modifications	Date	Name			