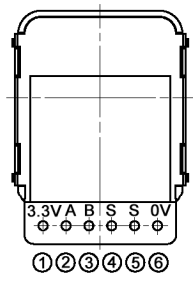


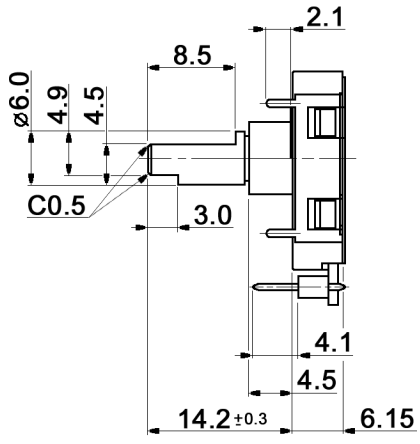


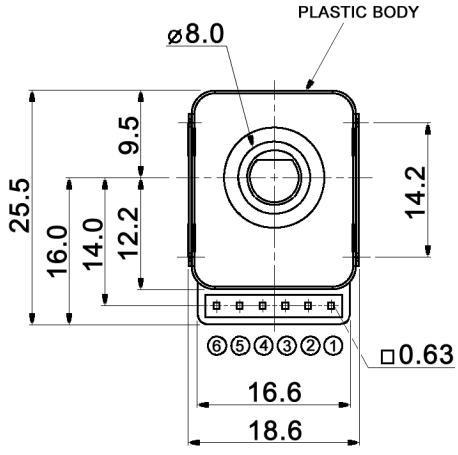


MOUNTING HOLE DETAIL

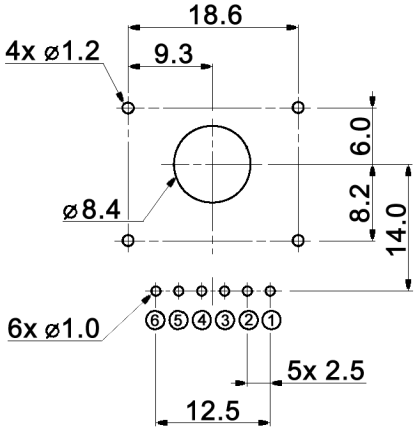


OUTPUT PHASES

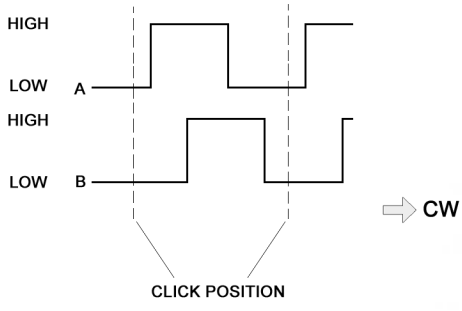


OUTPUT CIRCUITRY

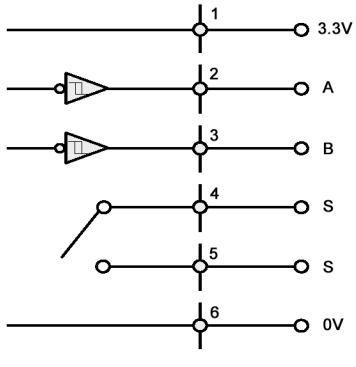


Specifications:

| | |
|---|---|
| Power supply: | 20mA +/-10mA, 3.3V +/-5% |
| Insulation resistance: | 100MOhm min. at 250V DC |
| Dielectric strength: | 300V AC for 1 minute |
| Operating temperature: | -20°C to +70°C |
| Storage temperature: | -20°C to +80°C |
| Electrical life: | 1 000 000 cycles min. |
| Soldering conditions: | 280°C, 3sec. |
| Resolution: | 24 pulses / turn |
| Detent: | 24 detents / turn |
| Rotational torque: | 40.8 +/-20.4gf.cm (4 +/-2mN.m) |
| Switch: | Rating: 0.1-10mA, 12V DC |
| | Contact resistance: 10 Ohm max. |
| | Operating force: 559 +/-204gf (5.5 +/-2N) |
| | Travel: 0.3 +/-0.05 mm |

Compliance: RohS II (2011/65/EU)

| | | | | | |
|---|---|---|---|---|---|
| Tolerances: under to 10: ±0.3mm<br>over 10 to 100: ±0.5mm | | | Date<br>05/17 | Name<br>dr | MEOP 19 VGP-24C-M2F14.2-PF3F |
| | | | | | |
| | | | | | |
| | | | | | |
| | | | knitter-switch | 30 38 63 | Page<br>1/1 |
| Modifications | Date | Name | | | |