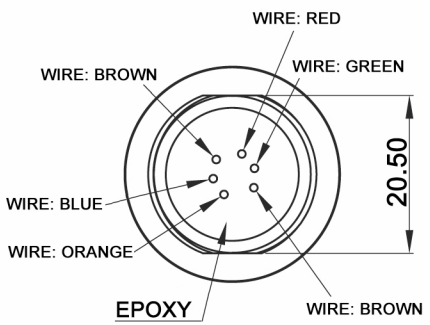

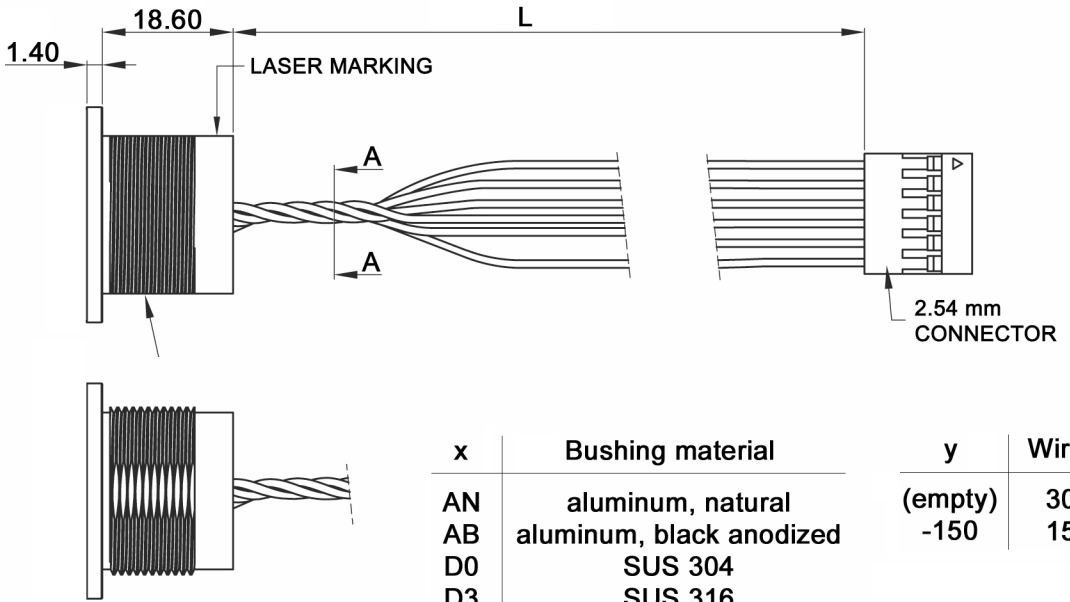

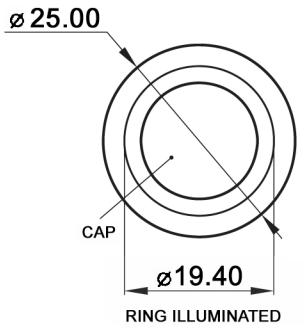

x	Bushing material
AN	aluminum, natural
AB	aluminum, black anodized
D0	SUS 304
D3	SUS 316

y	Wire length
(empty)	300 mm
-150	150 mm

HARDWARE

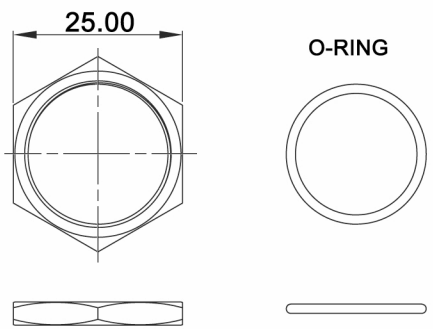

PANEL CUT-OUT

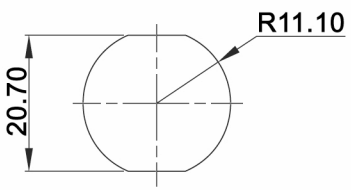

MAX. PANEL THICKNESS: 10.0 mm

Specifications:

Contact rating:	1 A, 5-24 V AC/DC (pulse mode)
Contact resistance:	1 Ohm max.
Pulse duration:	200ms min.
Operating temperature:	-20°C to +65°C
LED supply voltage:	12-24 V DC
Mechanical life:	50 000 000 cycles min.
IP class:	IP68
Material:	Bushing: see table "x"
	Cap: PC, aluminum alloy
	Sealing: silicone, epoxy
	O-ring: silicone
	Hex nut: brass, nickel plated

Compliance: RohS III (2015/863/EU)

APPLICATION DIAGRAM

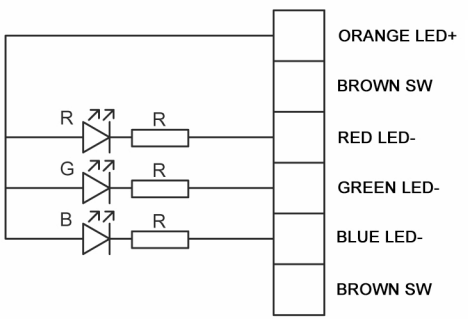

Tolerances: 0.00: ±0.25 mm 0.0: ±0.40 mm			Date 09/21	Name dr
Modifications	Date	Name		

PBP 22 xF-R-RGBy

knitter-switch

30 47 04

Page 1/1